AME ADJUSTABLE UPLIGHT 185

AME.AU185.18.SSL..30.15.

Ame, Collections, Outdoor

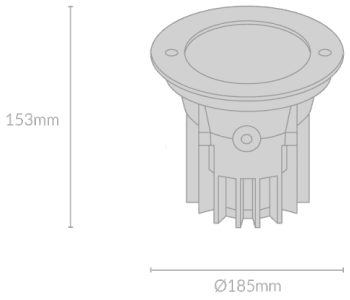

Mounting	Recessed
Wattage	18W
Voltage	DC24V
Dimensions	(D) Ø185mm x (H) 153mm
Cut Out Dimensions	(D) Ø175mm
Finish	Stainless Steel
CCT	3000K
Beam Angle	15°
Material	Stainless Steel 316 & Aluminium Body
IP Rating	IP67
IK Rating	IK09
Luminous Flux	1100lm
CRI	>92+
Colour Deviation	<3 SDCM
Lifetime	50,000 hours
Warranty	5 years
Luminaires Type	Outdoor

Control Gear

Accessories

AME.AU185	18	SSL		30	15	
PRODUCT NAME	WATTAGE	FINISH	INNER TRIM FINISH	CCT	BEAM ANGLE	CONTROL GEAR