LOOR LINEAR ADJUSTABLE SPOT 113

LOOR.LAS113.6.BLK..40.24.

Collections, Loor, Track Mounted

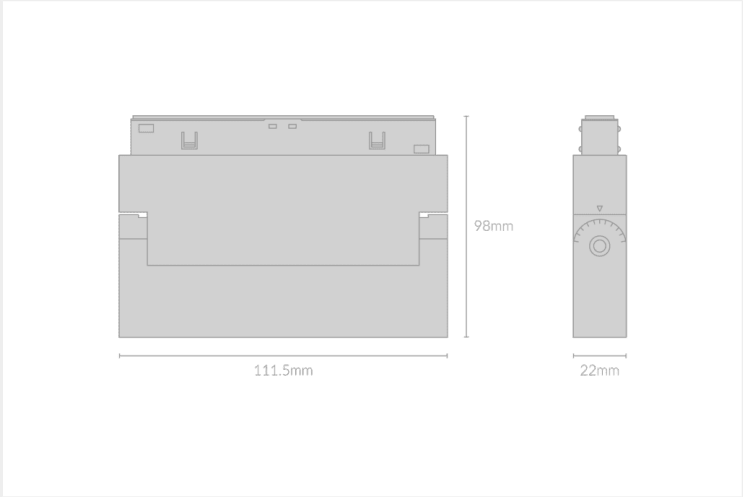

Mounting	
Wattage	6W
Voltage	DC48V
Dimensions	(H) 98mm x (L) 111.5mm
Finish	Black
CCT	4000K
Beam Angle	24°
Material	
Driver	Remote
IP Rating	IP20
Luminous Flux	402lm
CRI	>92+
Colour Deviation	<2 SDCM
Lifetime	
Warranty	5 years

Control Gear

Accessories

LOOR.LAS113	6	BLK		40	24	
PRODUCT NAME	WATTAGE	FINISH	INNER TRIM FINISH	CCT	BEAM ANGLE	CONTROL GEAR