Collections, Modo, Recessed

MODO ANTI-GLARE TILT S112

MODO.AGTS112.24.BLK.CHM.27.24.

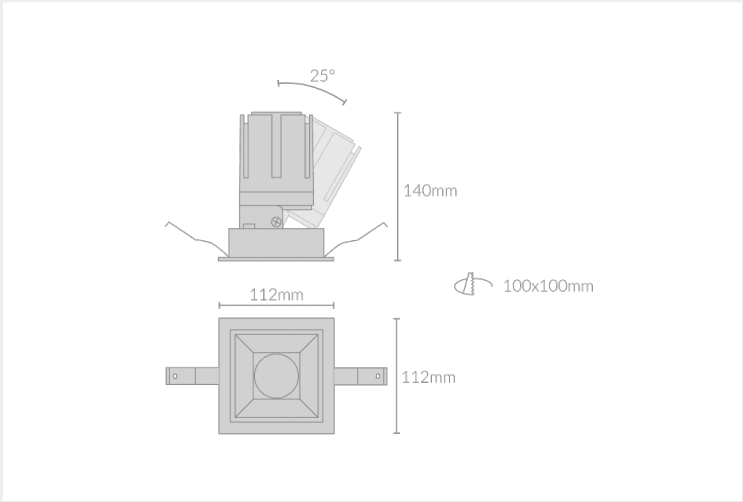

Mounting	Recessed
Wattage	24W
Voltage	240V
Dimensions	(W) 112mm x (H) 140mm x (L) 112mm
Cut Out Dimensions	(W) 100mm x (L) 100mm
Finish	Black
Inner Trim Finish	Chrome
CCT	2700K
Beam Angle	24°
Material	Aluminium
Driver	Remote
IP Rating	IP20
CRI	>92+
UGR	<19
Luminous Flux	2040lm
Colour Deviation	<2 SDCM
Lifetime	50,000 hours
Warranty	5 years

Control Gear

Accessories

MODO.AGTS112	24	BLK	CHM	27	24	
PRODUCT NAME	WATTAGE	FINISH	INNER TRIM FINISH	CCT	BEAM ANGLE	CONTROL GEAR