MODO DEEP RECESSED 110

MODO.DR110.24.WHT..30.38.

Collections, Modo, Recessed

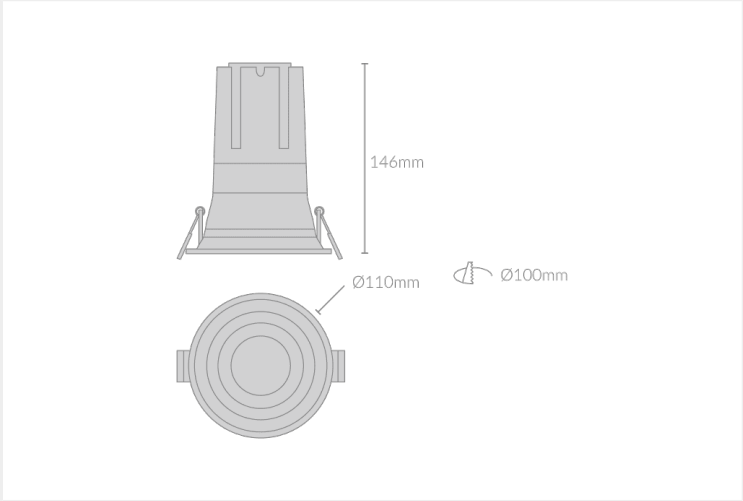

Mounting	Recessed
Wattage	24W
Voltage	240V
Dimensions	(D) Ø110mm x (H) 146mm
Cut Out Dimensions	(D) Ø100mm
Finish	White
CCT	3000K
Beam Angle	38°
Material	Aluminium
Driver	Remote
IP Rating	IP44
UGR	<19
Luminous Flux	2040lm
CRI	>92+
Colour Deviation	<2 SDCM
Lifetime	50,000 hours
Warranty	5 years
Luminaires Type	Recessed

Control Gear

Accessories

MODO.DR110	24	WHT		30	38	
PRODUCT NAME	WATTAGE	FINISH	INNER TRIM FINISH	CCT	BEAM ANGLE	CONTROL GEAR