MODO DEEP RECESSED 85

MODO.DR085.15.WHT..27.38.

Collections, Modo, Recessed

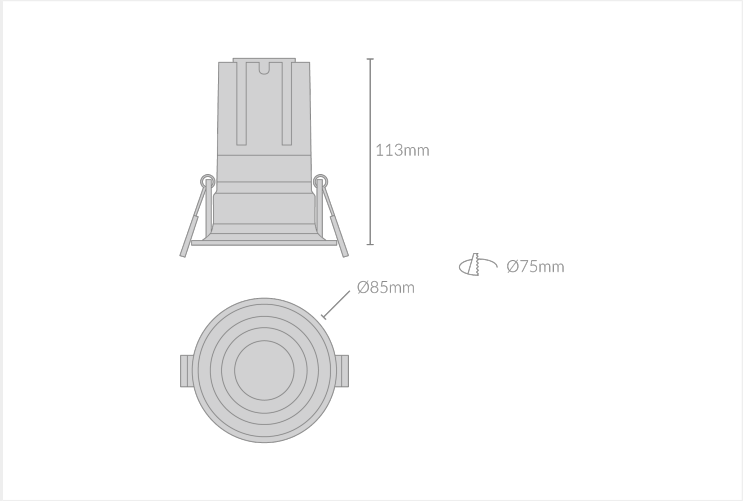

Mounting	Recessed
Wattage	15W
Voltage	240V
Dimensions	(D) Ø85mm x (H) 113mm
Cut Out Dimensions	(D) Ø75mm
Finish	White
CCT	2700K
Beam Angle	38°
Material	Aluminium
Driver	Remote
IP Rating	IP44
UGR	<19
Luminous Flux	1275lm
CRI	>92+
Colour Deviation	<2 SDCM
Lifetime	50,000 hours
Warranty	5 years

Control Gear

Accessories

MODO.DR085	15	WHT		27	38	
PRODUCT NAME	WATTAGE	FINISH	INNER TRIM FINISH	CCT	BEAM ANGLE	CONTROL GEAR