Collections, Modo, Recessed

MODO DEEP RECESSED WALL WASHER 88

MODO.DRWW085.15.BLK..35.24.

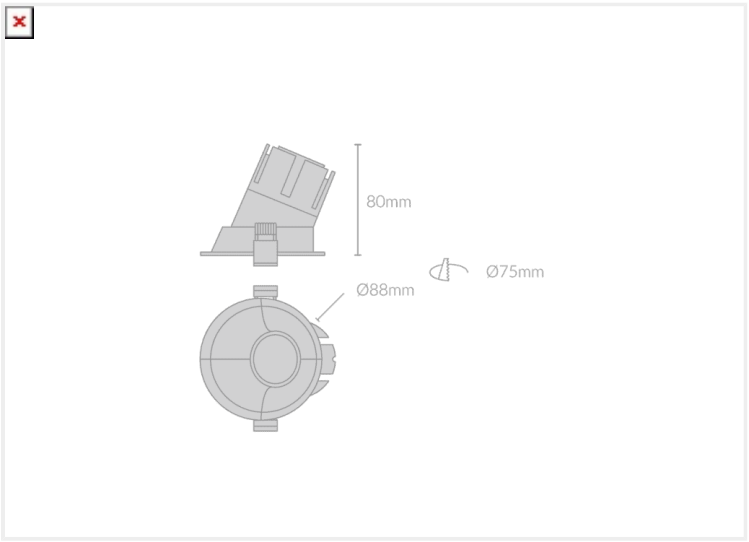

Mounting	Recessed
Wattage	15W
Voltage	240V
Dimensions	(D) Ø88mm x (H) 101mm
Cut Out Dimensions	(D) Ø75mm
Finish	Black
CCT	3500K
Beam Angle	24°
Material	Aluminium
Driver	Remote
IP Rating	IP20
UGR	<19
Luminous Flux	1275lm
CRI	>92+
Colour Deviation	<2 SDCM
Lifetime	50,000 hours
Warranty	5 years
Luminaires Type	Recessed

Control Gear

Accessories

MODO.DRWW085	15	BLK		35	24	
PRODUCT NAME	WATTAGE	FINISH	INNER TRIM FINISH	CCT	BEAM ANGLE	CONTROL GEAR