MODO SPOT LIGHT ONE R90

MODO.SLOR90.15.WHT..35.15.

Collections, Modo, Recessed

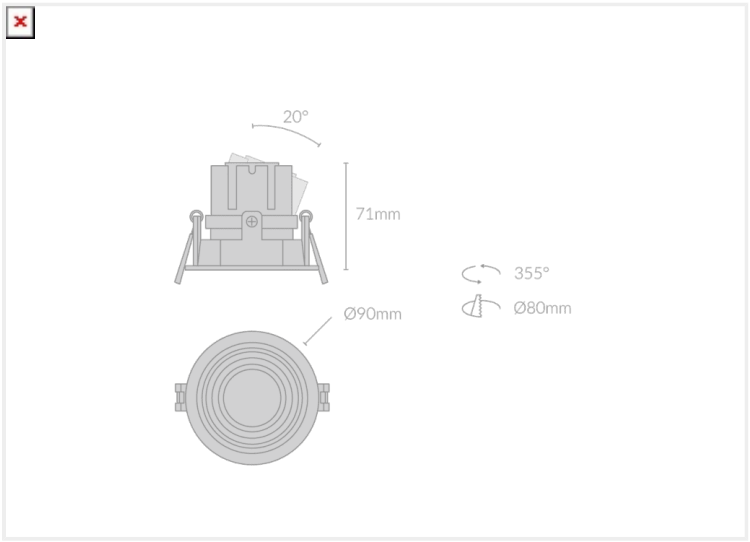

Mounting	Recessed
Wattage	15W
Voltage	240V
Dimensions	(D) Ø90mm x (H) 94mm
Cut Out Dimensions	(D) Ø80mm
Finish	White
CCT	3500K
Beam Angle	15°
Material	Aluminium
Driver	Remote
IP Rating	IP20
UGR	<19
Luminous Flux	1275lm
CRI	>92+
Colour Deviation	<2 SDCM
Lifetime	50,000 hours
Warranty	5 years
Luminaires Type	Recessed

Control Gear

Accessories

MODO.SLOR90	15	WHT		35	15	
PRODUCT NAME	WATTAGE	FINISH	INNER TRIM FINISH	CCT	BEAM ANGLE	CONTROL GEAR