S2137

LP.S2137..ANZ....

Linear Systems

Mounting	Surface
Dimensions	(W) 21mm x (H) 37mm
Length	3000mm
Finish	Anodized Aluminium
Extrusion Material	Aluminium
Diffuser Material	Polycarbonate
End Cap Material	Polycarbonate
Warranty	5 years
Luminaires Type	Linear Systems - Profiles

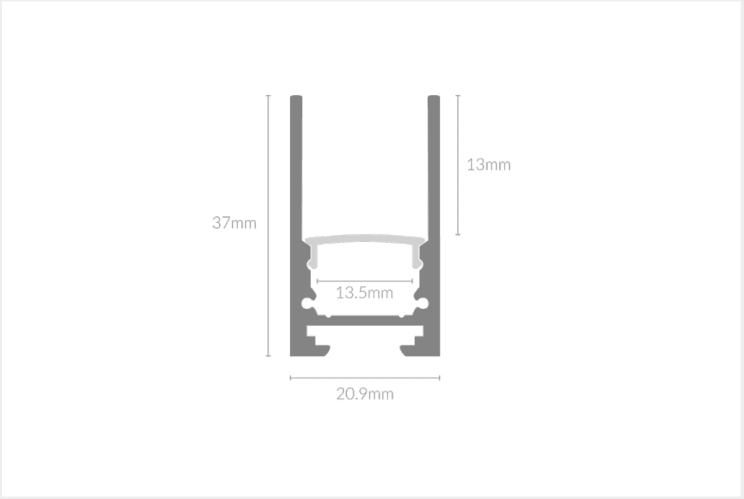

Control Gear

Accessories

LP.S2137		ANZ				
PRODUCT NAME	WATTAGE	FINISH	INNER TRIM FINISH	CCT	BEAM ANGLE	CONTROL GEAR